GS480RO

COMMERCIAL GLASS DISHWASHER + (REVERSE OSMOSIS SYSTEM)

REVERSE OSMOSIS SYSTEM

Compact high capacity reverse osmosis system is compact in size but is capable of producing water for high water demand applications. It is capable of removing up to 96% of impurities in water. These impurities include salts (calcium, magnesium, sodium, etc), heavy metals (lead, mercury, arsenic) and more. This makes the water produced by this system suitable for drinking and appliances protection. Can also be set up with a recirculating glasswasher for glasswashing. The glasses will come out spotlessly clean. This eliminates the need for hand polishing, reduced chemical usage and save on labour cost. It is easy to install and service and fits easily under a bench

TANK

Specification

- 1500 litres per day
- Dual RO membrane cartridges and pump design
- Full stainless steel panel
- Built in 19L storage tank
- Can add various sizes of external tank for different applications
- Built in TDS (total dissolved solid) meter for instant test of incoming and RO water quality
- Built in TDS adjuster to allow RO water to mix with filtered water.
- Quick change Watermark approved cartridges

Service Intervals

- AX10-CCF: replace every 1– 3 months
- AX10-GAC: replace every 1– 3 months
- AX10-ROM: : replace every 6-18 months (depending on the water quality, usage and pre-filter replacement

Note: The water production capacity is tested based on a new set of cartridges. The recommended filter cartridge replacement interval will depend on water quality and system usage

REVERSE OSMOSIS SYSTEM INSTALLATION DIAGRAM

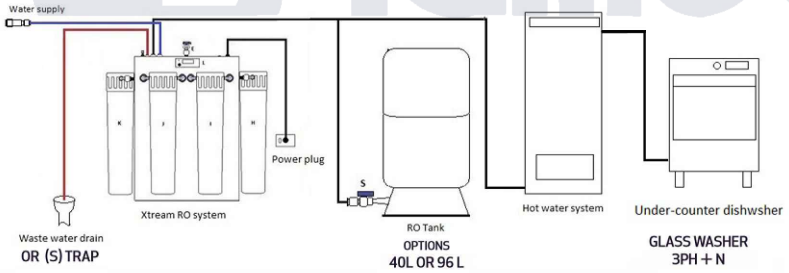

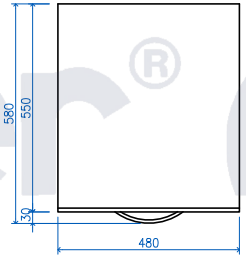

1 GS480RO TOP
Scale:1 : 20

Features:

- Frontal glass washer 230 50Hz
- Soft touch electronic control panel
- Wash & rinse temperature electronic display
- Stainless steel construction 18/10 AISI 304
- Insulated double skin, integral tank filter
- Stainless steel washing and rinsing arms
- Rotating lower washing, rotating upper & lower rinsing.
- Automatic tank loading, door opening safety device
- Warm rinsing, hot rinse at 85C (0.5ml) cycle
- Rinse aid dispenser + detergent dispenser (1ml) cycle
- Thermo control (device which guarantees the selected temperature for every rinsing cycle even in case of non-stop (work)
- Extractable control panel

Specification:

- 2 baskets for glasses, 1 insert for saucers, 1 cutlery container
- Capacity per hour 60/30/20
- Cycle period 1, 2, 3 minutes
- Basket Dimensions 40x40 + 350x430cm
- Available height 300mm
- W480 x D550 x H740 - 750

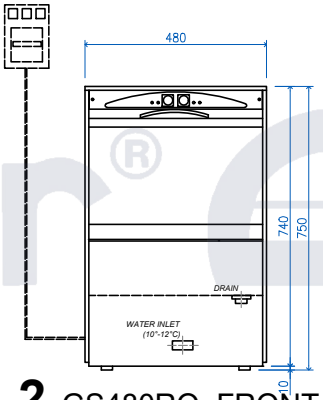

2 GS480RO FRONT
Scale:1 : 20

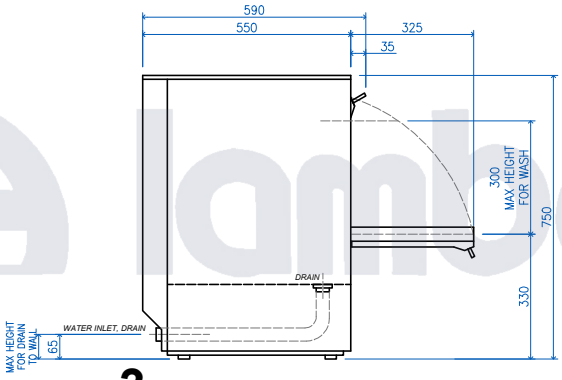

3 GS480RO SIDE
Scale:1 : 20

WaterMark
CERTIFICATE NO.: 23402

THIS DRAWING MUST NOT BE SCALED

THE CONTRACTOR SHALL VERIFY ALL DIMENSIONS, DATA AND LEVEL PRIOR TO THE COMMENCEMENT OF WORK. ALL ERRORS AND OMISSIONS BETWEEN THE DRAWINGS AND SPECIFICATION ARE TO BE REPORTED IMMEDIATELY.

-----© Copyright of Hospitality Equipment 2020 Pty. Ltd.-----

GREEN Line LAVA RANGE jemi

HOSPITALITY EQUIPMENT 2020 Pty. Ltd.
HE2020
A: Unit 3/49-63 Victoria Street, Smithfield NSW 2164
P: 02 9637 3737
E: salesnsw@he2020.com.au
W: www.he2020.com.au
COMMERCIAL KITCHEN CONSULTANT

MODEL NUMBER: GS480RO		
DRAWN C.	SCALE 1:20 (A4)	
DRAWING NO.	DATE Sept. 28, 2021	REV. A1